DTC	P0031	Oxygen Sensor Heater Control Circuit Low (Bank 1 Sensor 1)

DTC	P0032	Oxygen Sensor Heater Control Circuit High (Bank 1 Sensor 1)

DESCRIPTION

Refer to DTC P2195 (See page ES-293).

HINT:

- Although the DTC titles say the oxygen sensor, these DTCs relate to the Air-Fuel Ratio (A/F) sensor.
- Sensor 1 refers to the sensor mounted in front of the Three-Way Catalytic Converter (TWC) and located near the engine assembly.
- When any of these DTCs are set, the ECM enters fail-safe mode. The ECM turns off the A/F sensor heater in fail-safe mode. Fail-safe mode continues until the ignition switch is turned OFF.
- The ECM provides a pulse width modulated control circuit to adjust the current through the heater. The A/F sensor heater circuit uses a relay on the +B side of the circuit.

Reference (System Diagram of Sensor 1):

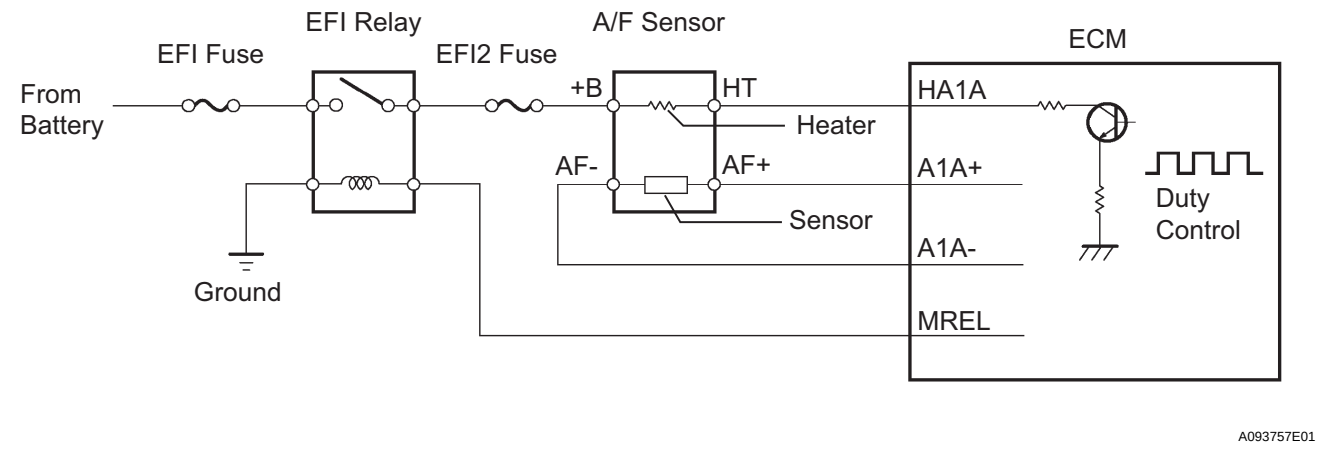

DTC No.	DTC Detection Conditions	Trouble Areas
P0031	A/F sensor heater current is less than 0.8 A (1 trip detection logic)	• Open in A/F sensor heater circuit • A/F sensor heater • EFI relay • ECM
P0032	A/F sensor heater current is more than 10 A (1 trip detection logic)	• Short in A/F sensor heater circuit • A/F sensor heater • EFI relay • ECM

MONITOR DESCRIPTION

The ECM uses information from the Air-Fuel Ratio (A/F) sensor to regulate the air-fuel ratio and keep it close to the stoichiometric level. This maximizes the ability of the Three-Way Catalytic Converter (TWC) to purify the exhaust gases.

The A/F sensor detects oxygen levels in the exhaust gas and transmits the information to the ECM. The inner surface of the sensor element is exposed to outside air. The outer surface of the sensor element is exposed to the exhaust gas. The sensor element is made of platinum coated zirconia and includes an integrated heating element.

The zirconia element generates a small voltage when there is a large difference in the oxygen concentrations between the exhaust gas and outside air. The platinum coating amplifies the voltage generation.
The A/F sensor is more efficient when heated. When the exhaust gas temperature is low, the sensor cannot generate useful voltage signals without supplementary heating. The ECM regulates the supplementary heating using a duty-cycle approach to adjust the average current in the sensor heater element. If the heater current is outside the normal range, the signal transmitted by the A/F sensor will be inaccurate, as a result, the ECM will be unable to regulate air-fuel ratio properly.
When the current in the A/F sensor heater is outside the normal operating range, the ECM interprets this as a malfunction in the sensor heater and sets a DTC.
Example:
The ECM sets DTC P0032 when the current in the A/F sensor heater is more than 10 A. Conversely, when the heater current is less than 0.8 A, DTC P0031 is set.

MONITOR STRATEGY

Related DTCs	P0031: A/F sensor heater range check (low current) P0032: A/F sensor heater range check (high current)
Required Sensors/Components (Main)	A/F sensor heater
Required Sensors/Components (Related)	-
Frequency of Operation	Continuous
Duration	10 seconds
MIL Operation	Immediate
Sequence of Operation	None

TYPICAL ENABLING CONDITIONS

P0031:

The monitor will run whenever the following DTCs are not present	None
Battery voltage	10.5 V or more
A/F sensor heater duty-cycle ratio	50 % or more
Time after engine start	10 seconds or more

P0032:

The monitor will run whenever the following DTCs are not present	None
Time after engine start	10 seconds or more

TYPICAL MALFUNCTION THRESHOLDS

P0031:

A/F sensor heater current	Less than 0.8 A

P0032:

A/F sensor heater current	More than 10 A

COMPONENT OPERATING RANGE

A/F sensor heater current	1.8 to 3.4 A at 20°C (68°F)

MONITOR RESULT

The monitor result (mode 6) allows the OBD scan tool to display the monitor status, test value and test limit.

A problem in this component can be found by comparing the test value and test limit. This procedure is described in "CHECKING MONITOR STATUS" (See page ES-15).

- TID (Test Identification) is assigned to each emission-related component.
- TLT (Test Limit Type):
  If TLT is 0, the component is malfunctioning when the test value is higher than the test limit.
  If TLT is 1, the component is malfunctioning when the test value is lower than the test limit.
- CID (Component Identification) is assigned to each test value.
- Unit Conversion is used to calculate the test value indicated on generic OBD scan tools.

TID $07: A/F Heater

TLT	CID	Unit Conversion	Description of Test Value	Description of Test Limit
1	$01	Multiply by 0.00017 (A)	Maximum A/F sensor heater current (bank 1)	Malfunction criterion

ES

WIRING DIAGRAM

Refer to DTC P2195 (See page ES-296).

INSPECTION PROCEDURE

HINT:
Read freeze frame data using an intelligent tester or OBD II scan tool. The ECM records vehicle and driving condition information as freeze frame data the moment a DTC is stored. When troubleshooting, freeze frame data can be helpful in determining whether the vehicle was running or stopped, whether the engine was warmed up or not, whether the air/fuel ratio was lean or rich, as well as other data recorded at the time of a malfunction.

1 INSPECT HEATED OXYGEN SENSOR (HEATER RESISTANCE)

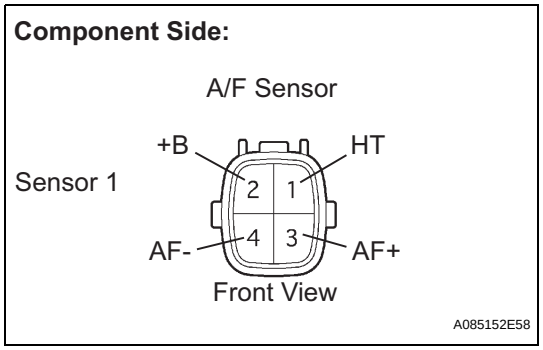

(a) Disconnect the A24 Air-Fuel Ratio (A/F) sensor connector.

(b) Measure the resistance between the terminals of the A/F sensor connector.

Standard resistance

Tester Connections	Specified Conditions
HT (1) - +B (2)	Between 1.8 Ω and 3.4 Ω at 20°C (68°F)
HT (1) - AF- (4)	10 kΩ or higher

(c) Reconnect the A/F sensor connector.

NG → **REPLACE AIR FUEL RATIO SENSOR**

OK

2 INSPECT EFI RELAY

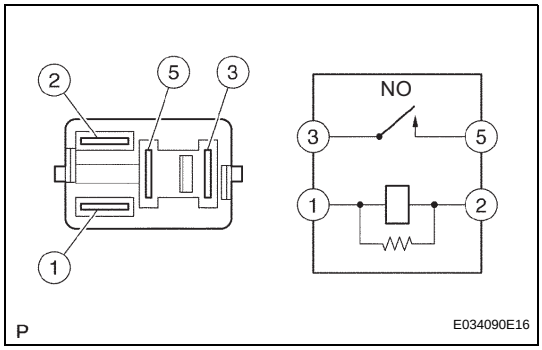

(a) Remove the EFI relay from the engine room R/B.
(b) Check the EFI relay resistance.
Standard resistance

Tester Connections	Specified Conditions
3 - 5	10 kΩ or higher
3 - 5	Below 1 Ω (when battery voltage applied to terminals 1 and 2)

(c) Reinstall the EFI relay.

NG → **REPLACE EFI RELAY**

OK

3 INSPECT ECM (HA1A VOLTAGE)

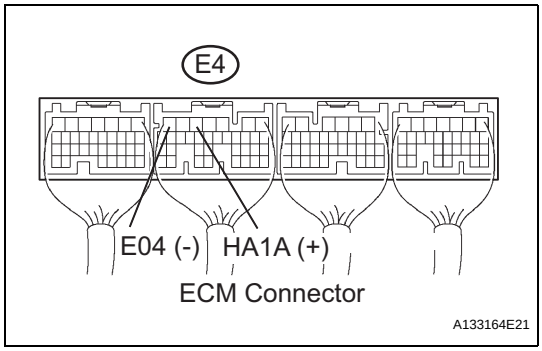

(a) Turn the ignition switch to ON.
(b) Measure the voltage between the terminals of the E4 ECM connector.
Standard voltage

Tester Connections	Specified Conditions
HA1A (E4-5) - E04 (E4-7)	Between 9 V and 14 V

OK → **REPLACE ECM**

NG

4	CHECK HARNESS AND CONNECTOR (AIR FUEL RATIO SENSOR - ECM, EFI RELAY)

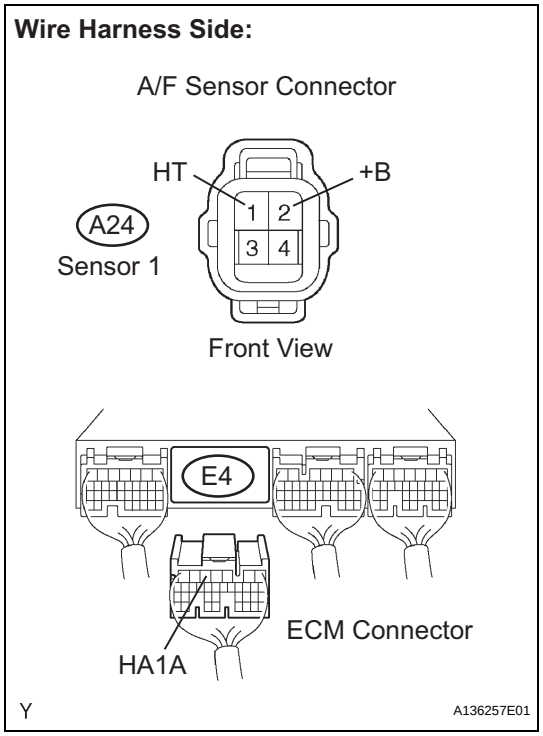

(a) Check the harness and connector between the ECM and A/F sensor.
  (1) Disconnect the A24 A/F sensor connector.
  (2) Disconnect the E4 ECM connector.
  (3) Check the resistance.
  Standard resistance (Check for open)

Tester Connections	Specified Conditions
HT (A24-1) - HA1A (E4-5)	Below 1 Ω

Standard resistance (Check for short)

Tester Connections	Specified Conditions
HT (A24-1) or HA1A (E4-5) - Body ground	10 kΩ or higher

  (4) Reconnect the A/F sensor connector.
  (5) Reconnect the ECM connector.

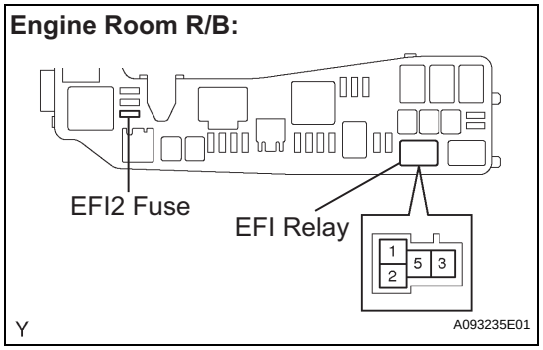

(b) Check the harness and connector between the A/F sensor and EFI relay.
  (1) Inspect the EFI2 fuse.
    - Remove the EFI2 fuse from the engine room R/B.
    - Check the EFI2 fuse resistance.
      Standard resistance:
      Below 1 Ω
    - Reinstall the EFI2 fuse.
  (2) Disconnect the A24 A/F sensor connector.
  (3) Remove the EFI relay from the engine room R/B.
  (4) Check the resistance.
  Standard resistance (Check for open)

Tester Connections	Specified Conditions
+B (A24-2) - EFI relay (3)	Below 1 Ω

Standard resistance (Check for short)

Tester Connections	Specified Conditions
+B (A24-2) or EFI relay (3) - Body ground	10 kΩ or higher

  (5) Reconnect the A/F sensor connector.
  (6) Reinstall the EFI relay.

NG → **REPAIR OR REPLACE HARNESS OR CONNECTOR**

OK

REPLACE ECM

ES